HEAT PUMP
EFFICIENT 13 SEER
1–1/2 THRU 5 TONS SPLIT SYSTEM
ENVIRONMENTALLY SOUND
R–410A REFRIGERANT
208 / 230 Volt, 1–phase, 60 Hz

GRANDAIRE®
Heating & Cooling Products

WCH3**4

Product Specifications

AHRI CERTIFIED™ www.ahridirectory.org

Use of the AHRI Certified TM Mark indicates a manufacturer's participation in the program. For verification of certification for individual products, go to www.ahridirectory.org .

c UL US LISTED

ENVIRONMENTALLY SOUND REFRIGERANT

Model Number	Size (tons)	Nominal BTU/hr	Min. Circuit Ampacity	Max. Fuse or Breaker	Operating Dimensions height x width x depth in. (mm)	Ship / Operating Weight lbs.(kg)
WCH3184GKB	1–1/2	18,000	11.8	20	28–7/16 x 23–1/8 x 23–1/8 (722 x 587 x 587)	137 / 119 (62 / 54)
WCH3244GKB	2	24,000	16.8	25	31–13/16 x 23–1/8 x 23–1/8 (808 x 587 x 587)	142 / 124 (65 / 56)
WCH3304GKB	2–1/2	30,000	21.1	30	28–7/16 x 31–3/16 x 31–3/16 (722 x 792 x 792)	170 / 149 (77 / 68)
WCH3364GKB	3	36,000	22.0	35	31–13/16 x 31–3/16 x 31–3/16 (808 x 792 x 792)	178 / 169 (81 / 77)
WCH3424GKB	3–1/2	42,000	26.3	40	31–13/16 x 31–3/16 x 31–3/16 (808 x 792 x 792)	204 / 186 (93 / 85)
WCH3484GKB	4	48,000	28.7	40	28–7/16 x 31–3/16 x 31–3/16 (722 x 792 x 792)	228 / 208 (104 / 95)
WCH3604GKB	5	60,000	34.3	50	31–13/16 x 31–3/16 x 31–3/16 (808 x 792 x 792)	252 / 228 (115 / 104)

ALL MODELS

REFRIGERATION CIRCUIT
- Scroll compressors on all models
- Suction line accumulator factory installed
- Integrated solid state control with Time–Temperature Defrost
- High and Low pressure switches
- Copper tube / aluminum fin coil
- Factory supplied liquid line filter drier

EASY TO INSTALL AND SERVICE
- Easy Access service valves on all models
- External high and low refrigerant service ports
- Only two screws to access control panel
- Factory charged with R–410A refrigerant

BUILT TO LAST
- Pre–painted cabinet finish over galvanized steel
- Coated inlet grille with 3/8" (10mm) grille spacing for extra protection (hail guard)

LIMITED WARRANTY
- 1 year unit replacement limited warranty
- 5 year compressor (with an additional 5 years compressor if properly registered) limited warranty to the original purchaser only for owner–occupied dwellings – see warranty certificate for details.
- 5 year parts (with an additional 5 years parts if properly registered) limited warranty to the original purchaser only for owner–occupied dwellings – see warranty certificate for details.

OUTDOOR UNIT MODEL NUMBER IDENTIFICATION GUIDE (single phase)

Digit Position:	1,2	3	4	5,6	7	8	9	10	11
Example Part Number:	**WC**	**H**	**3**	**24**	**4**	**G**	**K**	**A**	**1**

WC = Condensing Unit

A = Air Conditioner
H = Heat Pump **TYPE**

3 = 13 SEER
4 = 14 SEER **SEER**

18 = 18,000 BTUH = 1–1/2 tons
24 = 24,000 BTUH = 2 tons
30 = 30,000 BTUH = 2–1/2 tons
36 = 36,000 BTUH = 3 tons
42 = 42,000 BTUH = 3–1/2 tons
48 = 48,000 BTUH = 4 tons
60 = 60,000 BTUH = 5 tons **NOMINAL CAPACITY**

2 = R–22
4 = R–410A **REFRIGERANT**

A = Standard Grille
G = Coil Guard Grille **FEATURE**

K = 208/230–1–60 **VOLTAGE**

Sales Code

Extra Digit

ACCESSORIES PART NUMBER IDENTIFICATION GUIDE

Digit Position:	1	2	3	4	5	6, 7	8, 9	10, 11
Example Part Number:	**N**	**A**	**S**	**A**	**0**	**0 1**	**01**	**C H**

N = Non–Branded **BRANDING**

A = Accessory **PRODUCT GROUP**

S = Split System (AC & HP) **KIT USAGE**

A = Original
B = 2nd Generation **MAJOR SERIES**

0 = Generic or Not Applicable
2 = R–22
4 = R–410A **REFRIGERANT**

Product Identifier Number

Package Quantity

Type of Kit
(Example: CH = Crankcase Heater)

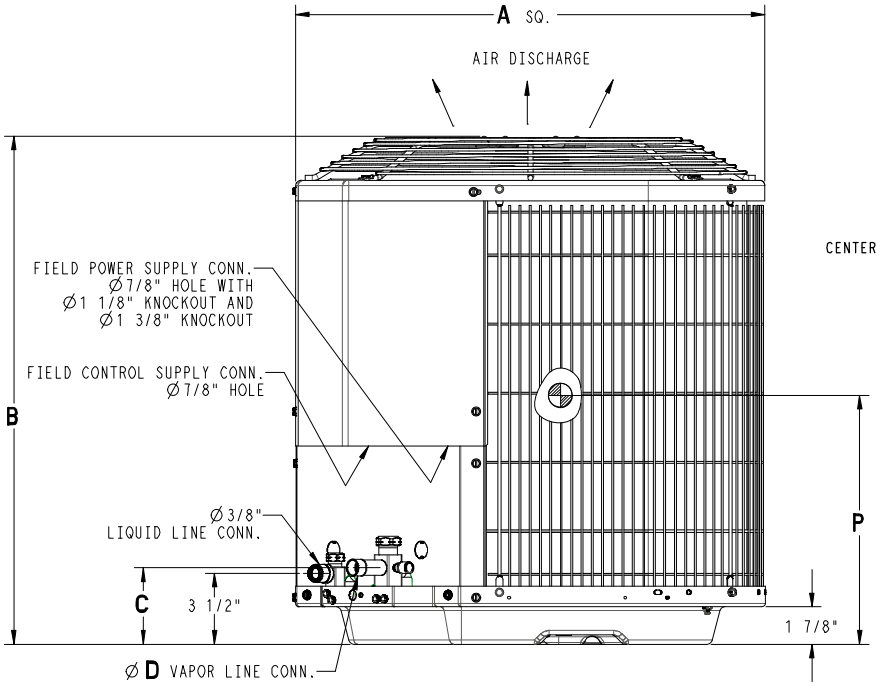

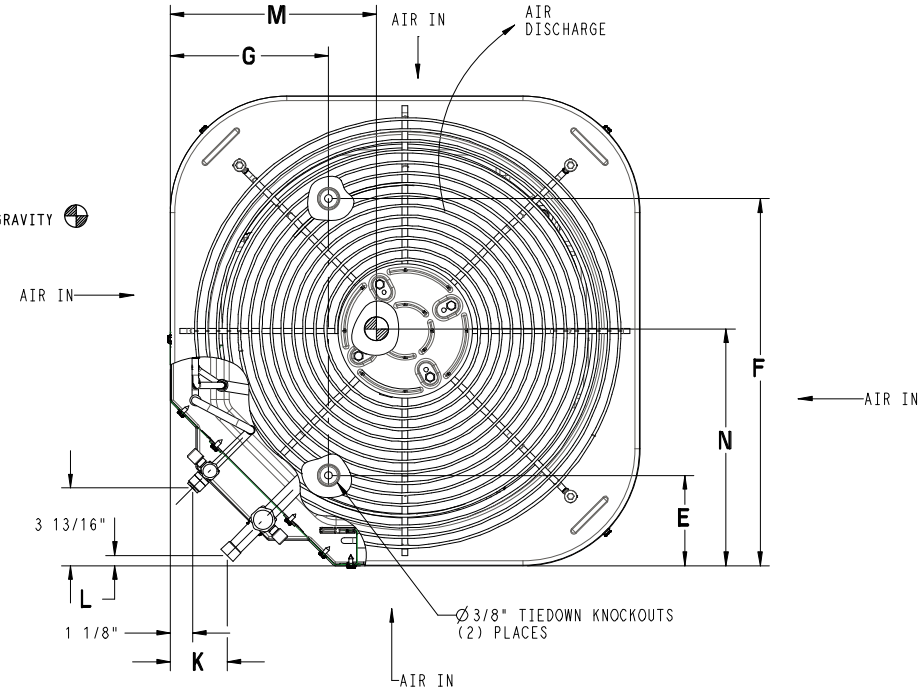

Model	All Dimensions Inches (English)													
	A	B	C	D	E	F	G	K	L	M	N	P	Minimum Mounting Pad Size	Crated Dimensions H x W x D
WCH3184GKB	23-1/8	28-7/16	3-3/4	5/8	4-7/16	18-1/16	7-13/16	2-13/16	1/2	11-1/2	10-1/2	11-1/2	23-1/2 x 23-1/2	30-5/8 x 24-1/8 x 24-1/8
WCH3244GKB	23-1/8	31-13/16	3-3/4	3/4	4-7/16	18-1/16	7-13/16	2-13/16	1/2	11-1/2	10-1/2	12-1/2	23-1/2 x 23-1/2	34 x 24-1/8 x 24-1/8
WCH3304GKB	31-3/16	28-7/16	3-3/4	3/4	6-9/16	24-11/16	9-1/8	2-15/16	5/8	15	15	11-1/2	31-1/2 x 31-1/2	30-5/8 x 32-3/16 x 32-3/16
WCH3364GKB	31-3/16	28-7/16	3-7/8	7/8	6-9/16	24-11/16	9-1/8	2-15/16	5/8	15	15	12-1/2	31-1/2 x 31-1/2	34 x 32-3/16 x 32-3/16
WCH3424GKB	31-3/16	31-13/16	3-7/8	7/8	6-9/16	24-11/16	9-1/8	2-15/16	5/8	15	15	12-1/2	31-1/2 x 31-1/2	34 x 32-3/16 x 32-3/16
WCH3484GKB	31-3/16	28-7/16	3-7/8	7/8	6-9/16	24-11/16	9-1/8	2-15/16	5/8	15	15	11-1/2	31-1/2 x 31-1/2	30-5/8 x 32-3/16 x 32-3/16
WCH3604GKB	31-3/16	31-13/16	3-7/8	7/8	6-9/16	24-11/16	9-1/8	2-15/16	5/8	15	15	12-1/2	31-1/2 x 31-1/2	34 x 32-3/16 x 32-3/16

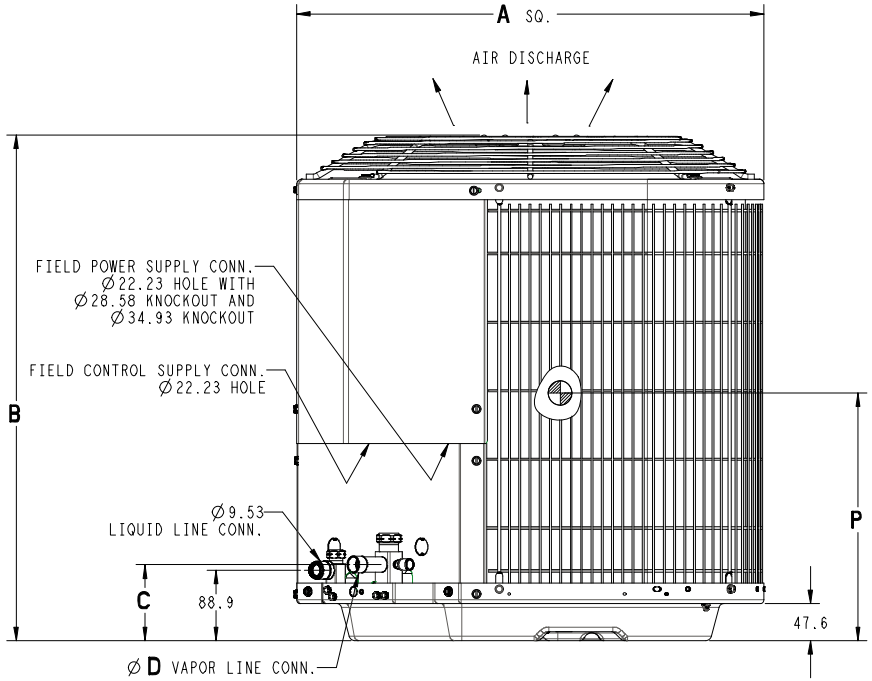

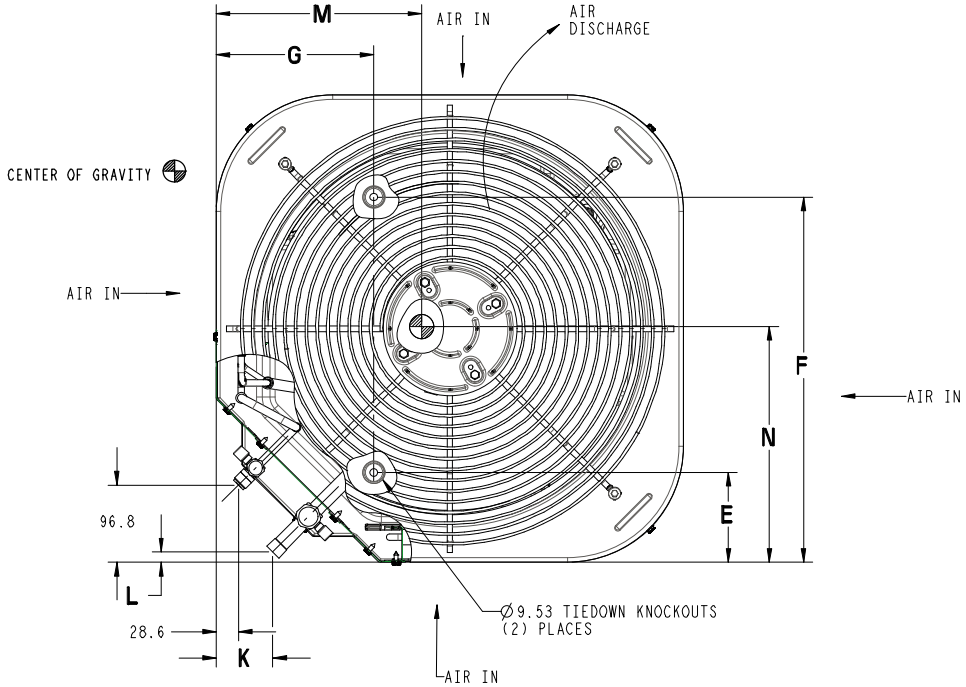

Model	Dimensions mm (SI Metric)													
	A	B	C	D	E	F	G	K	L	M	N	P	Minimum Mounting Pad Size	Crated Dimensions B(h) x A(w) x R(d)
WCH3184GKB	587	722	95	16	113	459	198	71	13	292	267	292	597 x 597	778 x 613 x 613
WCH3244GKB	587	808	95	19	113	459	198	71	13	292	267	318	597 x 597	864 x 613 x 613
WCH3304GKB	792	722	95	19	167	627	232	75	16	381	381	292	800 x 800	778 x 818 x 818
WCH3364GKB	792	808	98	22	167	627	232	75	16	381	381	318	800 x 800	864 x 818 x 818
WCH3424GKB	792	808	98	22	167	627	232	75	16	381	381	318	800 x 800	864 x 818 x 818
WCH3484GKB	792	722	98	22	167	627	232	75	16	381	381	292	800 x 800	778 x 818 x 818
WCH3604GKB	792	808	98	22	167	627	232	75	16	381	381	318	800 x 800	864 x 818 x 818

PHYSICAL DATA							
Model Size	**18**	**24**	**30**	**36**	**42**	**48**	**60**
Nominal Cooling Capacity (BTU/hr)	18,000	24,000	30,000	36,000	42,000	48,000	60,000
Nominal SEER	13.0	13.0	13.0	13.0	13.0	13.0	13.0
Sound Rating (dBA)	76	76	77	78	80	80	80
PSC Fan Motor HP	1/12	1/10	1/5	1/5	1/4	1/4	1/4
Fan RPM (single speed)	1100	1100	1100	1100	1100	1100	1100
Fan CFM	1800	2100	3000	3000	3400	3400	3400
Coil Face Area ft^2 (m^2)	9.8 (0.91)	11.2 (1.04)	15.0 (1.39)	17.2 (1.59)	17.2 (1.59)	15.0 (1.39)	17.2 (1.59)
Coil Rows – fins per inch	1 – 20	1 – 20	1 – 20	1 – 20	1 – 20	2 – 20	2 – 20
Liquid Line Connection Size in. (mm)	3/8 (10)	3/8 (10)	3/8 (10)	3/8 (10)	3/8 (10)	3/8 (10)	3/8 (10)
Vapor Line Connection Size in. (mm)	5/8 (16)	3/4 (19)	3/4 (19)	7/8 (22)	7/8 (22)	7/8 (22)	7/8 (22)
Recommended Line Set Liquid Tube Diameter in. (mm)	3/8 (10)	3/8 (10)	3/8 (10)	3/8 (10)	3/8 (10)	3/8 (10)	3/8 (10)
Recommended Line Set Vapor Tube Diameter in. (mm)	5/8 (16)*	3/4 (19)*	3/4 (19)*	7/8 (22)*	7/8 (22)*	7/8 (22)*	1⅛ (29)*
* Recommended Vapor Tube Line size is for standard installations. These recommendations may not apply to “Long Line” installations. When the total equivalent line length exceeds 80 feet (24.4m) or there is more than 20 feet (6.1m) vertical separation between indoor and outdoor units, consult the Long Line Application Guideline document before purchasing/installing line sets.							
Factory Charge R–410A lbs. (kg)	4.0 (1.81)	5.11 (2.32)	5.83 (2.64)	6.06 (2.75)	6.75 (3.06)	7.72 (3.50)	9.40 (4.26)
Required Subcooling °F (°C)	13 (7)	13 (7)	9 (5)	9 (5)	13 (7)	13 (7)	18 (10)
Weight, shipping lbs. (kg)	137 (62)	142 (65)	170 (77)	178 (81)	204 (93)	228 (104)	252 (115)
Weight, operating lbs. (kg)	119 (54)	124 (56)	149 (68)	169 (77)	186 (85)	208 (95)	228 (104)

ELECTRICAL DATA (208/230–1–60, voltage range 197V – 253V)							
Model Size	**18**	**24**	**30**	**36**	**42**	**48**	**60**
Minimum Circuit Ampacity – **MCA** (amps)	11.8	16.8	21.1	22.0	26.3	28.7	34.3
Maximum OverCurrent Protective device – **MOCP** (amps)	20	25	30	35	40	40	50
Compressor **RLA** (Rated Load Amps) **LRA** (Locked Rotor Amps)	9.0 48.0	12.8 58.3	16.0 77.0	16.7 79.0	19.9 109.0	21.8 117.0	26.3 134.0
Fan Motor **FLA** (Full Load Amps)	0.5	0.8	1.1	1.1	1.4	1.4	1.4

R–410A COOLING CAPACITY LOSS FOR VARIOUS LINE LENGTHS & TUBE DIAMETERS

Model Size	Liquid Line in.(mm)	Acceptable Vapor Line Sizes in. (mm)	Cooling Capacity Loss (%) at Total Equivalent Line Length, feet (m) Refer to Long Line Application Guideline to calculate equivalent length										
			Standard Application			Long Line Application (Requires Accessories)							
			25' (7.6)	50' (15.2)	80' (24.4)	81' (24.7)	100' (30.5)	125' (38.1)	150' (45.7)	175' (53.3)	200' (61)	225' (68.6)	250' (76.2)
18	3/8 (10)	1/2 (13)	1	2	3	3	4	6	7	8	9	10	12
		5/8 (16)	0	0	1	1	1	1	2	2	3	3	3
24		5/8 (16)	0	1	1	1	2	3	3	4	4	5	6
		3/4 (19)	0	0	0	0	0	1	1	1	1	1	2
30		5/8 (16)	1	2	3	3	3	4	5	6	7	8	9
		3/4 (19)	0	0	1	1	1	1	2	2	2	3	3
		7/8 (22)	0	0	0	0	0	1	1	1	1	1	1
36		5/8 (16)	1	2	4	4	5	6	7	9	10	11	13
		3/4 (19)	0	0	1	1	1	2	2	3	3	4	4
		7/8 (22)	0	0	0	0	0	1	1	1	1	2	2
42		3/4 (19)	0	1	2	2	2	3	4	4	5	6	6
		7/8 (22)	0	0	1	1	1	1	2	2	2	3	3
48		3/4 (19)	0	1	2	2	3	4	5	5	6	7	8
		7/8 (22)	0	0	1	1	1	2	2	2	3	3	4
60		3/4 (19)	1	2	4	4	5	6	7	9	10	11	12
		7/8 (22)	0	1	2	2	2	3	4	4	5	5	6
		1–1/8 (29)	0	0	0	0	1	1	1	1	1	1	2

* Applications are considered “Long Line” if the total equivalent tubing length exceeds 80 feet (24.4m) or there is more than 20 foot (6.1m) vertical separation between indoor and outdoor units. These applications require additional accessories and system modifications for reliable system operation.

Applications in shaded area may have height restrictions that limit allowable total equivalent length when outdoor unit is below indoor unit.

COOLING & HEATING PERFORMANCE FOR COMBINATION RATINGS
Indoor Models

For complete ratings information, use the AHRI website directory search: www.AHRIdirectory.org.
New ratings may be listed online before Specification Sheets are updated.

Unit Size WCH3	Indoor Model	ARI STANDARD RATINGS									
		COOLING					HEATING				
				SEER			High Temp		Low Temp		
		Capacity	Factory Enhance	Standard	TDR	EER	E Capacity	E COP	H Capacity	H COP	HSPF
18	WAP*184A*	17,400	TDR	13.00		11.00	16,800	3.60	9,400	2.24	7.7
	WAP*244A*	17,400	TDR	13.00		11.00	16,800	3.60	9,400	2.24	7.7
	WAHA18**4A*	18,000	TDR&TXV	13.00		11.50	16,800	3.58	9,500	2.24	7.7
	WAHA24**4A*	18,000	TDR&TXV	13.20		11.70	16,300	3.62	9,400	2.30	7.8
	WAH*184A*	18,000	TDR&TXV	13.00		11.50	16,800	3.60	9,400	2.24	7.7
	WAH*244A*	18,000	TDR&TXV	13.20		11.70	16,300	3.60	9,400	2.28	7.7
	WAX*184A*	18,000	TDR&TXV	13.50		12.00	16,100	3.64	9,400	2.32	7.8
	WAX*244A*	18,000	TDR&TXV	13.50		11.70	16,100	3.64	9,400	2.30	7.8
24	WAP*244A*	23,400	TDR	13.00		11.00	22,000	3.48	13,000	2.28	7.7
	WAP*304A*	24,000	TDR	13.50		11.50	22,000	3.64	13,000	2.36	7.7
	WAHA24**4A*	24,000	TDR&TXV	13.20		11.50	22,200	3.56	13,100	2.32	7.7
	WAHA30**4A*	24,000	TDR&TXV	13.20		11.30	22,200	3.58	13,100	2.32	7.7
	WAH*244A*	24,000	TDR&TXV	13.20		11.50	22,200	3.54	13,000	2.32	7.7
	WAH*304A*	24,000	TDR&TXV	13.70		11.70	22,200	3.66	13,000	2.38	7.8
	WAX*244A*	24,000	TDR&TXV	13.50		11.70	22,200	3.66	13,000	2.36	7.8
	WAX*304A*	24,000	TDR&TXV	13.20		11.50	22,200	3.64	13,200	2.36	7.8
30	WAP*304A*	28,600	TDR	13.00		11.00	28,600	3.50	17,700	2.34	7.7
	WAP*364A*	28,600	TDR	13.00		11.00	28,600	3.50	17,700	2.34	7.7
	WAHA30**4A*	30,000	TDR&TXV	13.20		11.30	29,800	3.48	17,600	2.36	7.7
	WAHA36**4A*	30,000	TDR&TXV	13.00		11.20	30,000	3.52	17,800	2.36	7.7
	WAH*304A*	30,000	TDR&TXV	13.20		11.30	30,000	3.52	17,700	2.36	7.7
	WAH*364A*	30,000	TDR&TXV	13.00		11.20	30,000	3.52	17,900	2.36	7.7
	WAX*304A*	30,000	TDR&TXV	13.50		11.50	30,000	3.60	17,600	2.40	7.8
	WAX*364A*	30,000	TDR&TXV	13.70		11.70	29,400	3.68	17,700	2.44	8.0
36	WAP*364A*	33,600	TDR	13.00		11.00	33,400	3.54	20,200	2.40	7.7
	WAP*424A*	34,200	TDR	13.50		11.50	33,400	3.74	20,200	2.52	8.0
	WAHA36**4A*	33,800	TDR&TXV	13.00		11.20	33,800	3.48	20,400	2.38	7.7
	WAH*364A*	34,400	TDR&TXV	13.50		11.70	33,600	3.60	20,000	2.46	8.0
	WAH*424A*	35,000	TDR&TXV	13.50		11.70	33,800	3.68	20,400	2.48	8.0
	WAX*364A*	35,200	TDR&TXV	14.00		12.20	33,600	3.76	20,000	2.54	8.2
	WAX*424A*	35,200	TDR&TXV	14.00		12.20	33,600	3.76	20,000	2.54	8.2

COOLING & HEATING PERFORMANCE FOR COMBINATION RATINGS
Indoor Models

For complete ratings information, use the AHRI website directory search: www.AHRIdirectory.org.
New ratings may be listed online before Specification Sheets are updated.

Unit Size WCH3	Indoor Model	ARI STANDARD RATINGS									
		COOLING					HEATING				
				SEER			High Temp		Low Temp		
		Capacity	Factory Enhance	Standard	TDR	EER	E Capacity	E COP	H Capacity	H COP	HSPF
42	WAP*424A*	41,500	TDR	13.00		11.00	39,000	3.62	24,000	2.44	8.0
	WAP*484A*	41,500	TDR	13.00		11.00	39,000	3.64	23,800	2.44	8.0
	WAH*424A*	42,000	TDR&TXV	13.00		11.30	39,500	3.62	24,000	2.42	8.0
	WAH*484A*	42,000	TDR&TXV	13.50		11.70	39,500	3.76	24,000	2.48	8.2
	WAX*424A*	42,000	TDR&TXV	13.20		11.30	39,000	3.64	23,800	2.44	8.0
	WAX*484A*	42,000	TDR&TXV	13.70		11.70	39,000	3.80	23,800	2.52	8.2
48	WAP*484A*	47,000	TDR	13.00		11.00	45,000	3.58	28,200	2.50	8.0
	WAP*604A*	47,500	TDR&TXV	13.50		11.50	45,000	3.68	28,200	2.56	8.0
	WAH*484A*	48,000	TDR&TXV	13.70		11.70	46,000	3.54	29,000	2.46	7.8
	WAH*604A*	48,000	TDR&TXV	14.00		12.00	45,500	3.80	28,200	2.60	8.2
	WAX*484A*	48,000	TDR&TXV	14.00		12.00	46,500	3.62	29,000	2.48	8.0
	WAX*604A*	48,000	TDR&TXV	14.00		12.20	45,000	3.74	28,000	2.60	8.2
	W*A*484BA*	47,000	TXV		13.00	11.30	45,500	3.56	28,200	2.48	7.8
	W*A*604CA*	48,000	TXV		13.20	11.30	46,000	3.62	28,800	2.50	8.0
	W*A*604DA*	48,000	TXV		13.20	11.30	46,000	3.62	28,800	2.50	8.0
	W*NH604DA*	48,000	TXV		13.20	11.30	46,000	3.60	28,800	2.50	8.0
	W*N(C,W)604DA*	48,000	TXV		13.20	11.30	46,000	3.60	28,800	2.50	8.0
60	WAX*604A*	57,500	TDR&TXV	13.00		11.00	55,000	3.66	33,600	2.48	8.0
	WAH*604A*	57,500	TDR&TXV	13.00		10.80	55,000	3.64	33,800	2.48	8.0

ACCESSORY USAGE GUIDELINES			
Accessory	Required for Low−Ambient Cooling Applications {Below 55°F (13°C)}	Required for Long Line Applications* {Over 80 Ft. (24.4m)}	Required for Seacoast Applications (Within 2 miles/3.22km)
Crankcase Heater	Yes	Yes	No
Evaporator Freeze Thermostat	Yes	No	No
Accumulator	Standard (factory installed)	Standard (factory installed)	Standard (factory installed)
Hard Start Kit (Capacitor & Relay)	Yes	Yes	No
Low Ambient Kit (Pressure Switch)	Yes	No	No
Hard Shutoff TXV	Yes	Yes	Yes
Isolation Relay	Yes	No	No
Support Feet, 4” (102mm) tall	Recommended	No	Recommended
Liquid Line Solenoid Valve	No	See Long−Line Application Guideline	No

* For Line Set lengths between 80 and 200 ft (24.4 and 61m) horizontal. or more than 20 ft (6.1m) indoor−outdoor vertical separation, refer to the Long Line Application Guideline document.

ACCESSORIES		
Part Number	**Description**	**Used On Model Size**
NASA001SC	Start Component − PTC Device	ALL
NASA001FS	Evaporator Freeze Thermostat	ALL
NASA001LS	Liquid Line Solenoid Valve	ALL
NASA001TD	Time Delay Relay, Indoor Blower	ALL
NASA001AC	Anti−Cycle Timer (5 minute delay)	ALL
NASA401LA	Low Ambient Kit (Pressure Switch)	ALL
AMF002OTA	Outdoor Thermometer Kit	ALL
NASA404PS	High Pressure Switch	ALL
AXWR01DFC	Fossil Fuel Kit	ALL
NASA001SF	Support Feet, 4” (102mm) tall	ALL
NASA003CH	Crankcase Heater for Compressor	18, 24, 30, 36
NASA001CH	Crankcase Heater for Compressor	42, 48, 60
NASA003SC	Hard Start Kit (Capacitor & Relay)	18, 24, 30, 36, 42, 48
NASA004SC	Hard Start Kit (Capacitor & Relay)	60
NASA002SJ	Sound Jacket, Compressor	18, 24, 30
NASA001SJ	Sound Jacket, Compressor	36, 42, 48
NASA003SJ	Sound Jacket, Compressor	60
EBAC05TXVX	TXV Kit, R−410A − 2005−2009 R−22 TXV Fancoils (air handlers)	18, 24, 30
EBAC06TXVX	TXV Kit, R−410A − 2005−2009 R−22 TXV Fancoils (air handlers)	36, 42
EBAC07TXVX	TXV Kit, R−410A − 2005−2009 R−22 TXV Fancoils (air handlers)	48, 60
NAEA40501TX	TXV Kit, R−410A − 2010 and later Piston Coils	18, 24, 30
NAEA40601TX	TXV Kit, R−410A − 2010 and later Piston Coils	36, 42
NAEA40701TX	TXV Kit, R−410A − 2010 and later Piston Coils	48, 60